FM Approvals
1151 Boston Providence Turnpike
P.O. Box 9102 Norwood, MA 02062 USA
T: **781 762 4300** F: 781-762-9375 www.fmapprovals.com

FM Approvals
Member of the FM Global Group

CERTIFICATE OF COMPLIANCE

HAZARDOUS LOCATION ELECTRICAL EQUIPMENT PER CANADIAN REQUIREMENTS

This certificate is issued for the following equipment:

BA474Da Indicating Temperature Transmitter
IS / I, II, III / 1 / ABCDEFG / T4 Ta = 70°C – CI470-12; Entity; Type 4X, IP66
I / 0 / Ex ia/ IIC / T4 Ta = 70°C – CI470-12; Entity; Type 4X, IP66
IPA / I, II, III / 2 / ABCDEFG / T4 Ta = 60°C – CI470-13; NIFW; Type 4X, IP66
I / 2 / IIC / T4 Ta = 60°C – CI470-13; NIFW; Type 4X, IP66
AIS / I, II, III / ABCDEFG - CI470-12; Entity; Type 4X, IP66
[I / 0] / [Ex ia] IIC - CI470-12; Entity; Type 4X, IP66

Intrinsic Safety Parameters
Input Parameters

Terminals	Vmax (V)	Imax (mA)	Pi (W)	Ci (uF)	Li (mH)
TB 2: 5 & 6	28	200	0.85	0.046	0.01
TB 3 (BA474D) or TB 601 (BA478C): 8 & 9: 11 & 12	30	200	0.85	0.02	0.01
TB1: 1, 2, 3 & 4	6	100	0.194	16.16	0

Output Parameters

Terminals	Voc	Isc	Po	Co	Lo
TB 3 (BA474D) or TB 601 (BA478C): 8 & 9: 11 & 12	0.7V	1.3uA	4uW	46nF	0.69mH
TB1: 1, 2, 3 & 4	6V	30.3mA	46mW	23.84uF	3mH

Nonincendive Field Wiring Parameters
Input Parameters

Terminals	Vmax (V)	Imax (mA)	Pi (mW)	Ci (uF)	Li (mH)
TB 1: 1, 2, 3 & 4	6	100	194	16.16	0
TB 2; 5 & 6	28	200		0.046	0.01
TB 3: 8 & 9; 10 & 11	32	200		0.02	0.01

Output Parameters

Terminals	Voc (V)	Isc (mA)	Po (mW)	Co (µF)	Lo (mH)
TB 1: 1, 2, 3 & 4	6	30.3	46	23.84	3

a = Parameter not affecting safety.

Maximum r.m.s. a.c. or d.c. voltage (For AIS/[Ex ia] application)
Terminals TB 2: 5 & 6; TB 3: 8 & 9; 10 & 11
Um = 250 V

Special conditions of use
1. The BA474D shall be protected from direct exposure to sunlight.

BA478Ca Indicating Temperature Transmitter
IS / I / 1 / ABCD / T4 Ta = 70°C – CI470-12; Entity; Type 4, IP66
I / 0 / Ex ia/ IIC / T4 Ta = 70°C – CI470-12; Entity; Type 4, IP66
NI / I / 2 / ABCD / T4 Ta = 60°C – CI470-13; NIFW; Type 4X, IP66
I / 2 / IIC / T4 Ta = 60°C – CI470-13; NIFW; Type 4X, IP66

Intrinsic Safety Parameters
Input Parameters

Terminals	Vmax (V)	Imax (mA)	Pi (W)	Ci (uF)	Li (mH)
TB 2: 5 & 6	28	200	0.85	0.046	0.01
TB 3 (BA474D) or TB 601 (BA478C): 8 & 9: 11 & 12	30	200	0.85	0.02	0.01
TB1: 1, 2, 3 & 4	6	100	0.194	16.16	0

Output Parameters

Terminals	Voc	Isc	Po	Co	Lo
TB 3 (BA474D) or TB 601 (BA478C): 8 & 9: 11 & 12	0.7V	1.3uA	4uW	46nF	0.69mH
TB1: 1, 2, 3 & 4	6V	30.3mA	46mW	23.84uF	3mH

Nonincendive Field Wiring Parameters
Input Parameters

Terminals	Vmax (V)	Imax (mA)	Pi (mW)	Ci (uF)	Li (mH)
TB 1: 1, 2, 3 & 4	6	100	194	16.16	0
TB 2; 5 & 6	28	200		0.046	0.01
TB 3: 8 & 9; 10 & 11	32	200		0.02	0.01

a = Parameter not affecting safety.

Special conditions of use
1. To maintain the Type 4X and IP66 enclosure rating the BA478C shall be installed in accordance with the mounting conditions provided on drawing numbers CI470-12 and CI470-13.
2. The BA478C shall be installed in compliance with the enclosure, mounting, spacing and segregation requirements of the ultimate application.
3. The BA478C shall be protected from direct exposure to sunlight.

Equipment Ratings:

BA474D Indicating Temperature Transmitter
Intrinsically safe for Class I, II and III, Division 1, Groups A, B, C, D, E, F and G and Class I, Zone 0, Group IIC Hazardous (Classified) Locations when installed in accordance with the entity concept in accordance with Control Drawings CI470-12; Nonincendive for Class I, Division 2, Groups A, B, C and D and Class I, Zone 2, Group IIC, Hazardous (Classified) Locations when installed in accordance with the nonincendive field wiring concept in accordance with Control Drawings CI470-13; Suitable for Class II and III, Division 2, Groups E, F and G Hazardous (Classified) Locations when installed in accordance with the nonincendive field wiring concept in accordance with Control Drawings CI470-13. Temperature class T4 at an ambient of 60°C. Enclosure Type 4X and IP66.

Associated intrinsically safe apparatus for connection to Class I, II and III, Division 1, Groups A, B, C, D, E, F and G and Class I, Zone 0, Group IIC Hazardous (Classified) Locations when installed in accordance with the entity concept in accordance with Control Drawings CI470-12. Enclosure Type 4X and IP66.

BA478C Indicating Temperature Transmitter
Intrinsically safe for Class I, Division 1, Groups A, B, C and D and Class I, Zone 0, Group IIC Hazardous (Classified) Locations when installed in accordance with the entity concept in accordance with Control Drawings CI470-13; Nonincendive for Class I, Division 2, Groups A, B, C and D and Class I, Zone 2, Group IIC, Hazardous (Classified) Locations when installed in accordance with the nonincendive field wiring concept in accordance with Control Drawings CI480-13. Temperature class T4 at an ambient of 60°C. Front panel Type 4X and IP66.

FM Approved for:

BEKA associates Ltd
Hitchin, Hertfordshire, SG5 2DD. United Kingdom

FM Approvals

Member of the FM Global Group

This certifies that the equipment described has been found to comply with the following Approval Standards and other documents:

C22.2 No 157	1992
C22.2 No. 1010.1	1992
C22.2 No. 213	1987
C22.2 No. 94.02	2007
C22.2 No. 60079-0-07	2007
C22.2 E60079-11-02	2002

Original Project ID: 3035396C

Approval Granted: August 16, 2010

Subsequent Revision Reports / Date Approval Amended

Report Number	Date	Report Number	Date

FM Approvals LLC

J. E. Marquedant
Group Manager, Electrical

16 August 2010
Date

Iss.	Date	Modification	Ckd.	Appd.
1	02.10 2008	New drawing	.	.

HAZARDOUS (CLASSIFIED) LOCATION

UNCLASSIFIED LOCATION

BA474D LOCATIONS:
Class I, Division 1, Groups A, B,C & D
Class II, Division 1, Groups E, F & G
Class III
Class I, Zone 0, Group IIC

BA478C LOCATIONS:
Class I, Division 1, Groups A, B,C & D
Class I, Zone 0, Group IIC

SEE NOTES 1 & 3

BA474D & BA478C

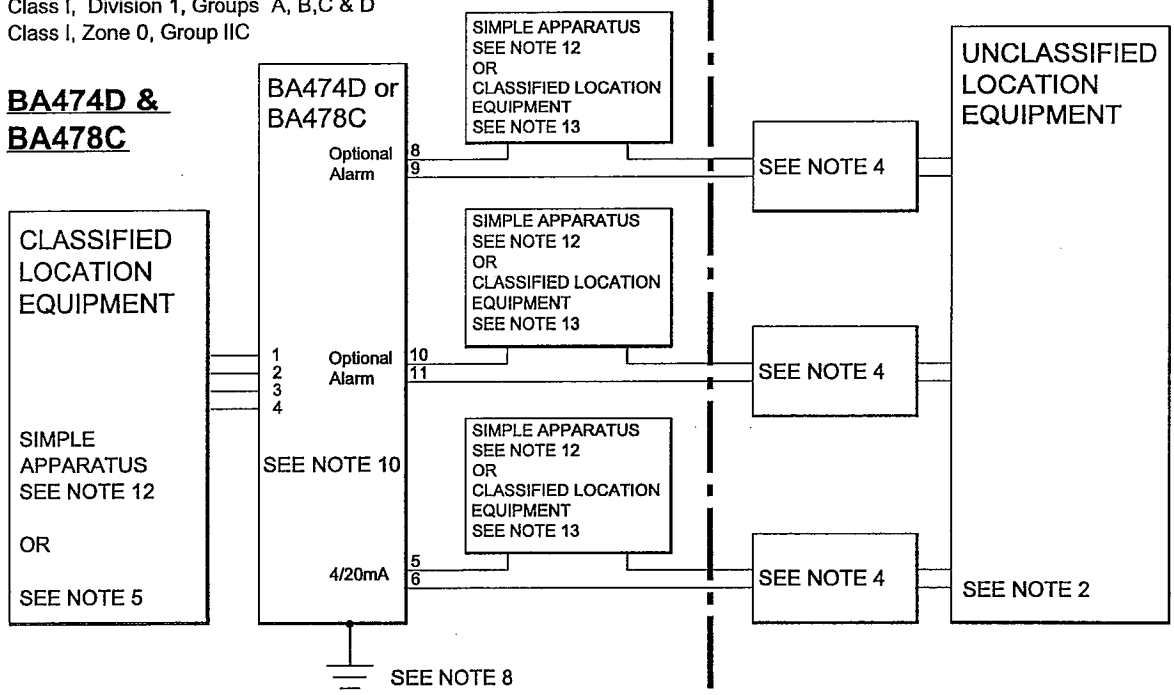

BA474D

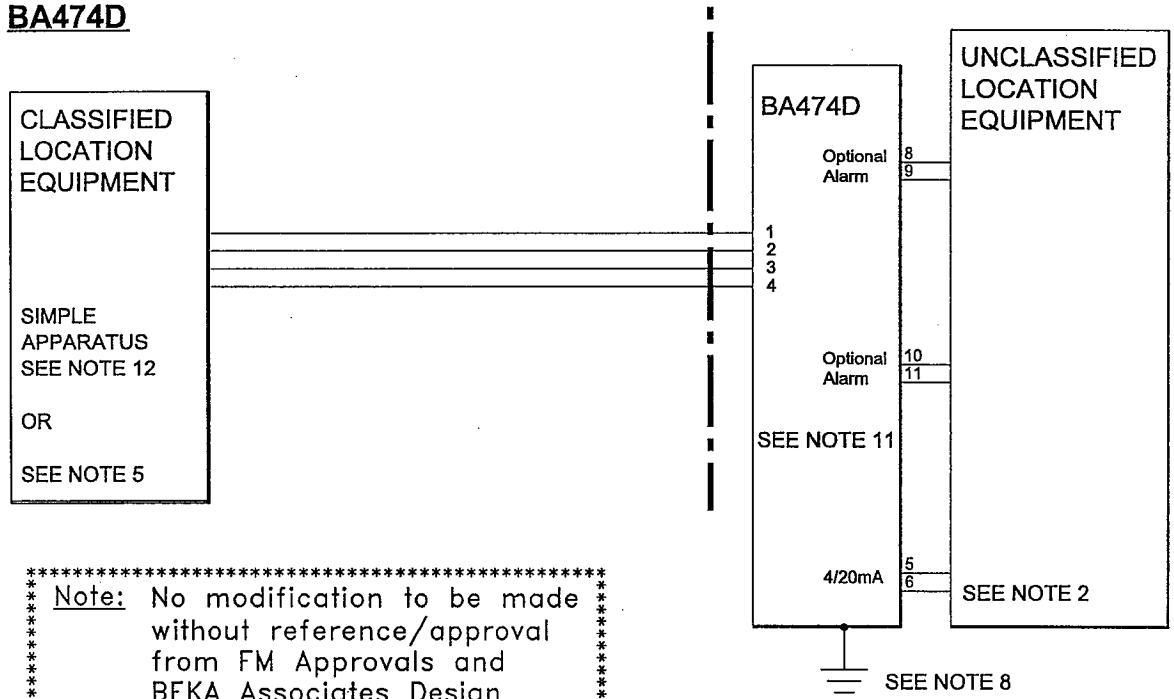

Note: No modification to be made without reference/approval from FM Approvals and BEKA Associates Design Department.

Title	Drawn	Checked	Scale
FM Approvals Control Drawing for Intrinsically Safe BA474D & BA478C Indicating Temperature Transmitters	RC		N/A
	Drawing No. Sheet 1 of 4	CI470–12	

File No CI470–12s01.dwg 06.08.10

Notes

1. The associated protective barriers and galvanic isolators shall be FM approved and the manufacturers' installation drawings shall be followed when installing this equipment. For installations in Canada the associated protective barriers and galvanic isolators shall be cFM or CSA approved and the manufacturers' installation drawings shall be followed when installing the equipment.

2. The unclassified location equipment shall not use or generate more than 250V rms or 250V dc.

3. Installations shall be in accordance with ANSI/ISA RP 12.06.01 "Installation of Intrinsically Safe Systems for Hazardous (Classified) Locations" and the National Electrical Code ANSI/NFPA 70. Installations in Canada shall be in accordance with the Canadian Electrical Code C22.2.

4. One single channel or one two channel associated protective barrier or galvanic isolator with entity parameters complying with the following requirements:

Uo or Vt	equal or less than	The lowest Ui of the FM, cFM or CSA approved apparatus installed in the loop.
Io or It	equal to or less than	The lowest Ii of the FM, cFM or CSA approved apparatus installed in the loop.
Po	equal to or less than	The lowest Pi of the FM, cFM or CSA approved apparatus installed in the loop.
Lo	equal to or greater than	The sum of the cable inductances and the internal inductances Li of each FM, cFM or CSA approved apparatus in the loop.
Co	equal to or greater than	The sum of the cable capacitance and the internal capacitance Li of each FM, cFM or CSA approved apparatus in the loop.

5. Simple apparatus or

Uo or Vt	equal or less than	Ui
Io or It	equal to or less than	Ii
Po	equal to or less than	Pi
Li + Lcable	equal to or less than	Lo
Ci + Ccable	equal to or less than	Co

Cont.

Iss.	Date	Modification	Ckd.	Appd.
1	02.10 2008	New drawing		

BEKA associates Hitchin England

Title: FM Approvals Control Drawing for Intrinsically Safe BA474D & BA478C Indicating Temperature Transmitters

Drawn: RC | Checked: | Scale: N/A

Drawing No. CI470–12

Sheet 2 of 4

6. When installed in a hazardous (classified) location the BA474D Indicating Temperature Transmitter shall be fitted with cable glands / conduit hubs selected from the following table

Metallic glands and hubs must be grounded – see note 7.

Class	Permitted gland or conduit hub
Class I	Any metallic or plastic cable gland or conduit hub that provides the required environmental protection.
Class II and III	**Crouse – Hinds Myler hubs** ST-1 STA-1 SSTG-1 STG-1 STAG-1 MHUB-1 HUB 1 **O-Z / Gedrey Hubs** CHM-50DT CHMG-50DT **Killark Glands** CMCXAA050 MCR050 MCX050

7. In addition to the supplied bonding plate, when 2 or 3 metallic glands or conduit hubs are fitted to a BA474D Indicating Temperature Transmitter, all metallic glands or conduit hubs shall be connected together and grounded.

8. **CAUTION** The BA474D and BA478C Indicating Temperature Transmitter enclosures are manufactured from conducting plastic per Article 250 of the National Electrical Code, the enclosures shall be grounded using the 'E' terminal on the terminal block.

9. The BA474D and BA478C Indicating Temperature Transmitters shall be mounted where they are shielded from direct sunlight.

10. **Terminals 1, 2, 3 and 4**

Ui	=	6V
Ii	=	100mA
Pi	=	194mW
Uo	=	6V
Io	=	30.3mA
Po	=	46mW
Ci	=	16.16µF
Li	=	0
Co	=	23.84µF
Lo	=	3mH

Terminals 5 and 6

Ui	=	28V
Ii	=	200mA
Pi	=	0.85W
Ci	=	46.42nF
Li	=	0.01mH
Co	=	36.58nF
Lo	=	0.69mH

Terminals 8, 9, 10 and 11

Ui	=	30V
Ii	=	200mA
Pi	=	0.85W
Uo	=	0.7V
Io	=	1.3µA
Po	=	4.0µW
Ci	=	20nF
Li	=	0.01mH
Co	=	46nF
Lo	=	0.69mH

Iss.	Date	Modification	Ckd.	Appd.
1	02.10 2008	New drawing		

BEKA associates Hitchin England

Title: FM Approvals Control Drawing for Intrinsically Safe BA474D & BA478C Indicating Temperature Transmitters

Drawn: RC | Checked: | Scale: N/A

Drawing No. CI470–12

Sheet 3 of 4

File No CI470–12s01.dwg 06.08.10

11. **Terminals 1, 2, 3 and 4**

Ui	=	6V
Ii	=	100mA
Pi	=	194mW
Uo	=	6V
Io	=	30.3mA
Po	=	46mW
Ci	=	16.16µF
Li	=	0
Co	=	23.84µF
Lo	=	3mH

Terminals 5, 6, 8, 9, 10 and 11

Um	=	250V

12. Simple Apparatus shall be as defined in the National Electrical Code ANSI/NFPA 70, or for installations in Canada by the Canadian Electrical Code C22.2

13. Simple apparatus or:

Uo or Vt	equal or less than	Ui
Io or It	equal to or less than	Ii
Po	equal to or less than	Pi
Li (BA474D or BA478C + Classified Location Equipment) + Lcable	equal to or less than	Lo
Ci (BA474D or BA478C + Classified Location Equipment) + Ccable	equal to or less than	Co

14. When mounting the BA478C in an enclosure to maintain Type 4 front panel rating:

Minimum panel thickness should be 2mm (0.08inches) Steel
3mm (0.12inches) Aluminium

Outside panel finish should be smooth, free from particle inclusions, runs or build-up around cut-out.

Panel cut-out should be 66.2 x 136.0mm -0.0 +0.5
(2.60 x 5.35 inches -0.00 +0.02)

Edges of panel cut-out should be deburred and clean

Four panel mounting clips are required and each should be tightened to between:

20 and 22cNm (1.77 to 1.95 inLb)

Iss.	Date	Modification	Ckd.	Appd.
1	02.10 2008	New drawing		

Title: FM Approvals Control Drawing for Intrinsically Safe BA474D & BA478C Indicating Temperature Transmitters

Drawn: RC | Checked: | Scale: N/A

Drawing No. CI470–12
Sheet 4 of 4

File No CI470–12s01.dwg 06.08.10

HAZARDOUS (CLASSIFIED) LOCATION

UNCLASSIFIED LOCATION

BA474D LOCATIONS:

Class I, Division 1, Groups A, B,C & D
Class II, Division 1, Groups E, F & G
Class III
or
Class I, Zone 0, Group IIC

Class I, Division 2, Groups A, B,C & D
Class II, Division 2, Groups E, F & G
Class III
or
Class I, Zone 2, Group IIC

SEE NOTE 2

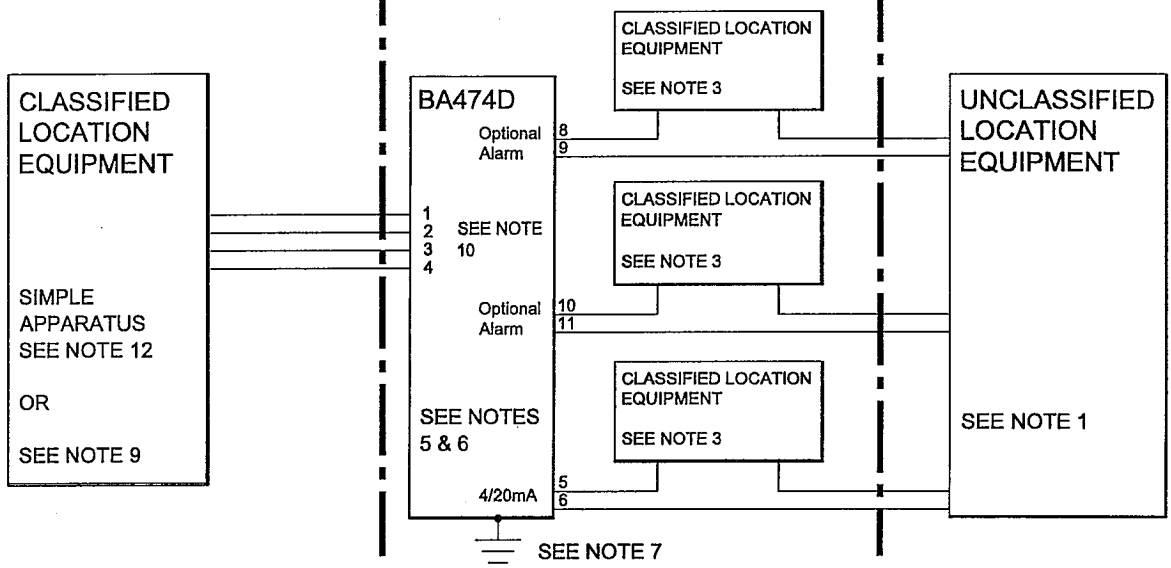

HAZARDOUS (CLASSIFIED) LOCATION

UNCLASSIFIED LOCATION

BA478C LOCATIONS:

Class I, Division 2, Groups A, B,C & D
or
Class I, Zone 2, Group IIC

SEE NOTE 2

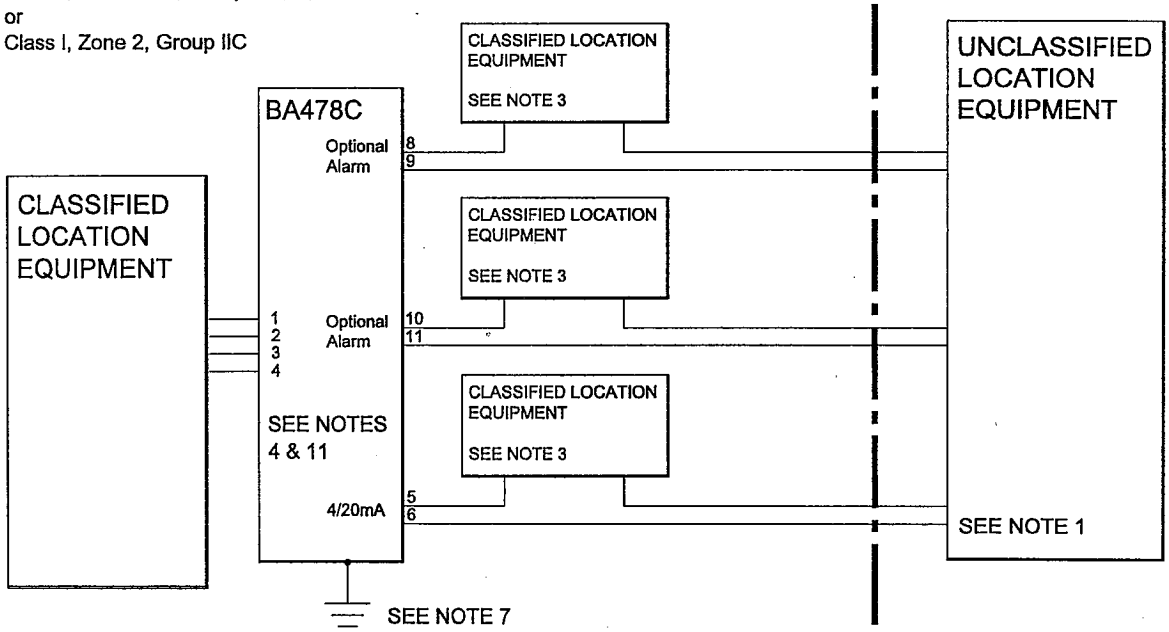

****
Note: No modification to be made without reference / approval from FM Approvals and BEKA associates Design Department.
****

Iss.	Date	Modification	Ckd.	Appd.
1	03.10 2008	New drawing		

BEKA associates Hitchin England

Title	Drawn	Checked	Scale
FM Approvals Control Drawing for Nonincendive BA474D & BA478C Indicating Temperature Transmitters	RC		N/A
	Drawing No. Sheet 1 of 3	CI470–13	

File No CI470–13s01.dwg 06.08.10

Notes

1. The unclassified location equipment shall not use or generate more than 250V rms or 250V dc.

2. Nonincendive field wiring installations shall be in accordance with the National Electrical Code ANSI/NFPA 70. The Nonincendive Field Wiring concept allows interconnection of Nonincendive Field Wiring Apparatus with Associated Nonincendive Field Wiring Apparatus using any of the wiring methods permitted for unclassified locations. Installations in Canada shall be in accordance with the Canadian Electrical Code C22.2.

3. Classified location equipment shall be FM Approved Nonincendive Field Wiring Apparatus or simple apparatus as defined ANSI/NFPA 70. For Canadian installations classified location equipment shall be cFM or CSA Approved Nonincendive Field Wiring Apparatus.

4. To maintain IP66 protection between the BA474C Indicating Temperature Transmitter and the mounting panel:

   Four panel mounting clips shall be used

   Minimum panel thickness should be — 2mm (0.08inches) Steel; 3mm (0.12inches) Aluminium

   Outside panel finish shall be smooth, free from particle inclusions, runs or build-up around cut-out.

   Panel cut-out shall be — 66.2 x 136.0mm -0.0 +0.5 (2.60 x 5.35 inches –0.00 +0.02)

   Edges of panel cut-out shall be deburred and clean

   Each panel mounting clip shall be tightened to between: — 20 and 22cNm (1.77 to 1.95 inLb)

5. When installed in a hazardous (classified) location the BA474D Indicating Temperature Transmitter shall be fitted with cable glands / conduit hubs selected from the following table

   Metallic glands and hubs must be grounded – see note 6.

Class	Permitted gland or conduit hub
Class I	Any metallic or plastic cable gland or conduit hub that provides the required environmental protection.
Class II and III	**Crouse – Hinds Myler hubs** ST-1 STA-1 SSTG-1 STG-1 STAG-1 MHUB-1 HUB 1 **O-Z / Gedrey Hubs** CHM-50DT CHMG-50DT **Killark Glands** CMCXAA050 MCR050 MCX050

Iss.	Date	Modification	Ckd.	Appd.
1	03.10 2008	New drawing		

Title: FM Approvals Control Drawing for Nonincendive BA474D & BA478C Indicating Temperature Transmitters

Drawn: RC | Checked: | Scale: N/A

Drawing No. CI470–13 Sheet 2 of 3

File No CI470–13s01.dwg 06.08.10

6. In addition to the supplied bonding plate, when 2 or 3 metallic glands or conduit hubs are fitted to a BA474D Indicating Temperature Transmitter, all metallic glands or conduit hubs must be connected together and grounded.

7. **CAUTION** The BA474D and BA478C Indicating Temperature Transmitter enclosures are manufactured from conducting plastic per Article 250 of the National Electrical Code, the enclosures shall be grounded using the 'E' terminal on the terminal block.

8. The BA474D and BA478C Indicating Temperature Transmitters shall be mounted where they are shielded from direct sunlight.

9. Simple apparatus or

Uo or Vt	equal or less than	Ui
Io or It	equal to or less than	Ii
Po	equal to or less than	Pi
Li + Lcable	equal to or less than	Lo
Ci + Ccable	equal to or less than	Co

10.

Terminals 1, 2, 3 and 4			**Terminals 5 and 6**			**Terminals 8, 9, 10 and 11**		
Ui	=	6V	Ui	=	28V	Ui	=	32V
Ii	=	100mA	Ii	=	200mA	Ii	=	200mA
Pi	=	194mW	Ci	=	46.42nF	Ci	=	20nF
Uo	=	6V	Li	=	0.01mH	Li	=	0.01mH
Io	=	30.3mA						
Po	=	46mW						
Ci	=	16.16µF						
Li	=	0						
Co	=	23.84µF						
Lo	=	3mH						

11.

Terminals 1, 2, 3 and 4			**Terminals 5 and 6**			**Terminals 8, 9, 10 and 11**		
Ui	=	6V	Ui	=	28V	Ui	=	32V
Ii	=	100mA	Ii	=	200mA	Ii	=	200mA
Ci	=	16.16µF	Ci	=	46.42nF	Ci	=	20nF
Li	=	0	Li	=	0.01mH	Li	=	0.01mH

12. Simple Apparatus shall be as defined in the National Electrical Code ANSI/NFPA 70, or for installations in Canada by the Canadian Electrical Code C22.2

13. When mounting the BA478C in an enclosure to maintain Type 4 front panel rating:

Minimum panel thickness should be — 2mm (0.08inches) Steel
3mm (0.12inches) Aluminium

Outside panel finish should be smooth, free from particle inclusions, runs or build-up around cut-out.

Panel cut-out should be — 66.2 x 136.0mm -0.0 +0.5
(2.60 x 5.35 inches -0.00 +0.02)

Edges of panel cut-out should be deburred and clean

Four panel mounting clips are required and each should be tightened to between:

20 and 22cNm (1.77 to 1.95 inLb)

Iss.	Date	Modification	Ckd.	Appd.
1	03.10 2008	New drawing	.	.

BEKA associates Hitchin England

Title	Drawn	Checked	Scale
FM Approvals Control Drawing for Nonincendive BA474D & BA478C Indicating Temperature Transmitters	RC		N/A
	Drawing No. Sheet 3 of 3	CI470–13	

File No CI470–13s01.dwg 06.08.10