THIRD ANGLE PROJECTION DIMENSIONS IN mm DO NOT SCALE

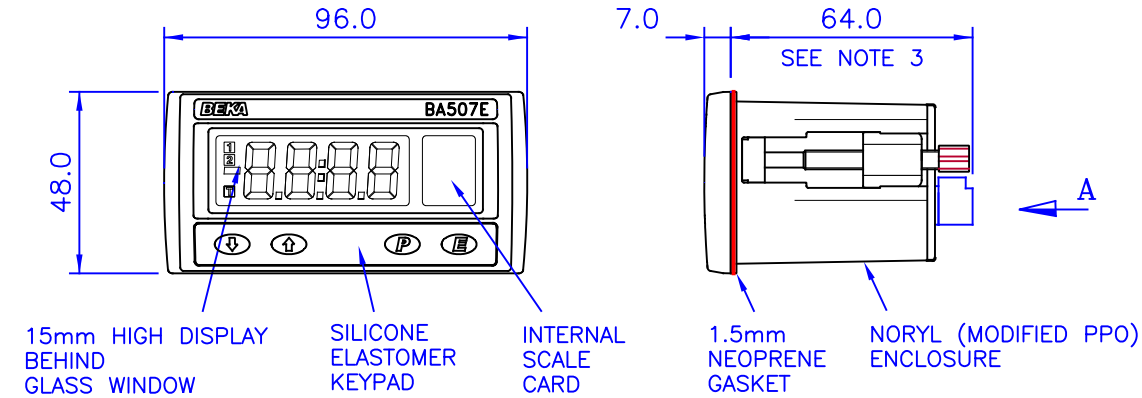

VIEW ON ARROW A
(REAR PANEL DETAILS)

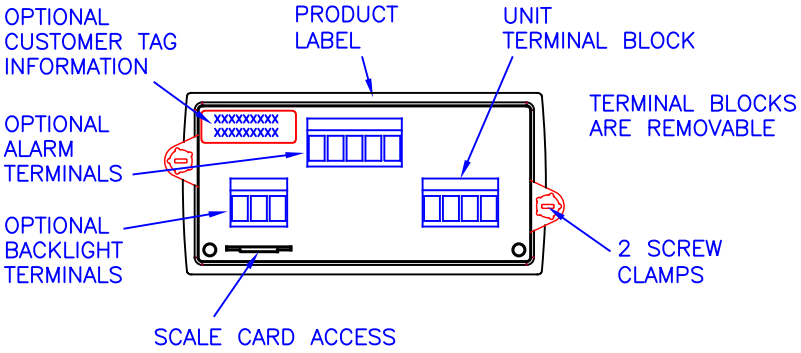

TERMINAL CONNECTIONS:

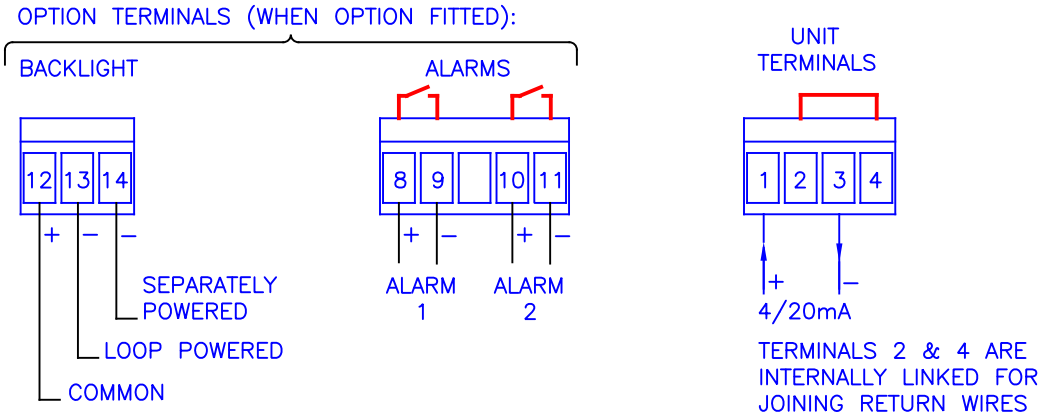

INSTALLATION:

1 INSERT UNIT INTO PANEL CUTOUT FROM FRONT.

2 SCREW CLAMPS ARE CLIPPED TO THE INDICATOR & TIGHTENED FROM REAR OF PANEL. RECOMMENDED TORQUE 22cNm MAX.

3 FOR PANELS GREATER THAN 3mm THICK ADD ADDITIONAL DEPTH FOR CLAMPS. (ie ADD PANEL THICKNESS LESS 3mm)

PANEL CUTOUT:

DIN 43 700: $92^{+0.8}_{-0} \times 45^{+0.6}_{-0}$

FOR IP66: $90^{+0.5}_{-0} \times 43.5^{+0.5}_{-0}$

Iss.	Date	Modification	Ckd.	Appd.
1	01.12 2011	.	AMH	AC

BEKA associates Hitchin England

company confidential, copyright reserved.

Title	Drawn	Checked	Scale
CUSTOMER DRAWING for BA507E 4 DIGIT INDICATOR IN PANEL MOUNTING ENCLOSURE	RC	AMH	NTS
	Drawing No. CD507E		